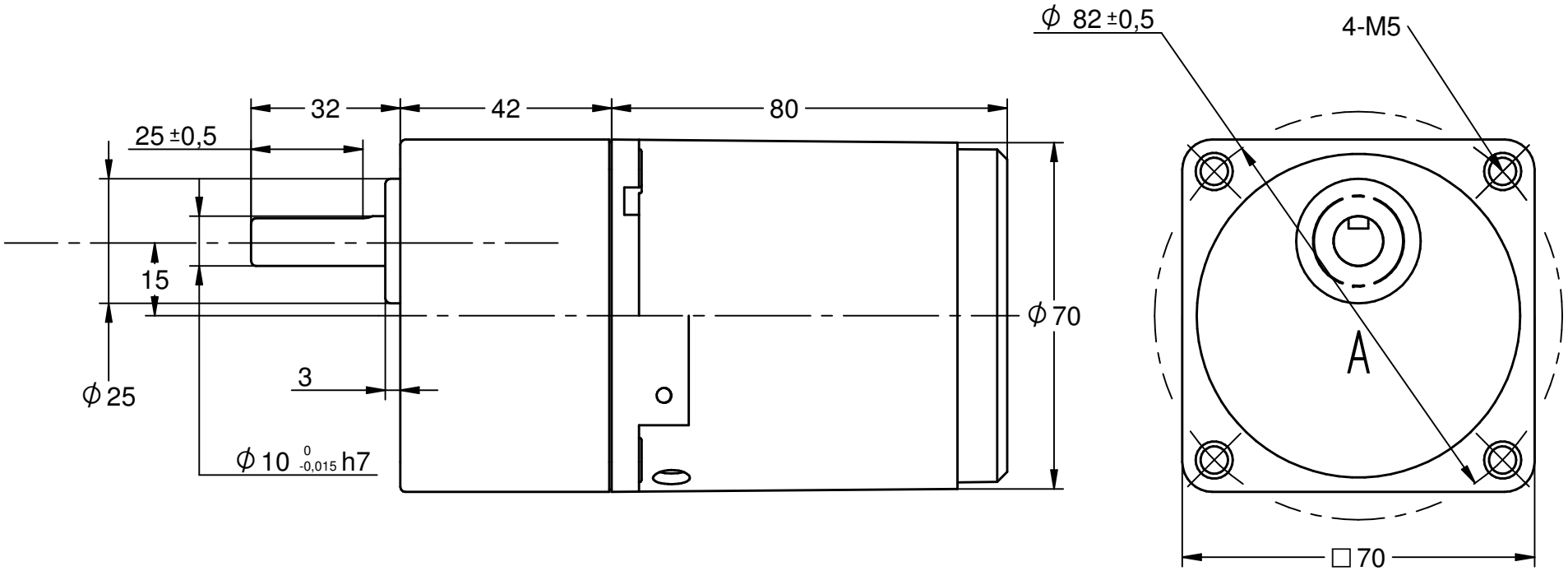

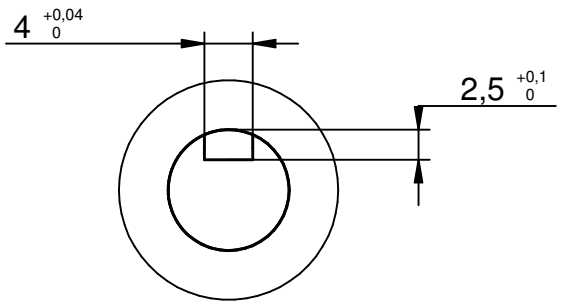

DETAIL A

Label

AI-AIR015C-S70A
Date: YY.MM.DD
www.transmotec.com

TRANSMOTEC www.transmotec.com	Article No. AI-AIR015C-S70A		Base model 2 Base Model		
	Scale 1:1,25	Projection	Date 2020-03-31	Rev. Date	Rev. No.

Copyright
This drawing contains confidential information and is the property of Transmotec Sweden AB, without whose permission it may not be copied, shown or handed to a third party or otherwise used and is to be returned promptly upon request to the design owner, who is responsible for the drawing.